PEFERSA

MERCHMAKER®

Start Making Merch Like a Pro.

OPERATOR'S MANUAL



STAHLS'

MERCHMAKER®
Start Making Merch Like a Pro.

Safety Instruction

When using your heat press, basic precautions should always be followed, including the following:

1. Read all instructions.
2. Use heat press only for its intended use.
3. To reduce the risk of electric shock, do not immerse the heat press in water or other liquids.
4. Never pull cord to disconnect from outlet, instead grasp plug and pull to disconnect.
5. Do not allow cord to touch hot surfaces.
6. Allow heat press to cool completely before storing.
7. Do not operate heat press with a damaged cord or if the equipment has been dropped or damaged. To reduce the risk of electric shock, do not disassemble or attempt to repair the heat press. Take it to a qualified service person for examination and repair. Incorrect assembly or repair could increase the risk of fire, electric shock, or injury to persons when the equipment is used.
8. This appliance is not intended for use by persons (including children) with reduced physical, sensory or mental capabilities, or lack of experience and knowledge, unless they have been given supervision or instruction concerning use of the appliance by a person responsible for their safety.
9. Close supervision is necessary for any heat press being used by or near children. Do not leave equipment unattended while connected.
10. Burns can occur when touching hot metal parts.
11. To reduce the likelihood of circuit overload, do not operate other high voltage equipment on the same circuit.
12. If an extension cord is necessary, then a 10-amperage rated cord should be used. Cords rated for less amperage may overheat. Care should be taken to arrange the cord so that it cannot be pulled or tripped over.
13. Clean exposed surfaces with a damp cloth to prevent dust build-up, which could lead to overheating.
14. All other maintenance and service should be performed by an authorized service representative.

Table Of Contents



Safety Instructions 2

Machine View 4

Operating Instructions 5-7

- Initial Setup 5
- Adjusting Settings 6
- Printing with your Heat Press 6-7

Storage and Transportation 8-9

Replacement Parts List 10

Parts Location Guide 11

Electrical Schematics 12

Contact 13

MERCHMAKER®

Machine View



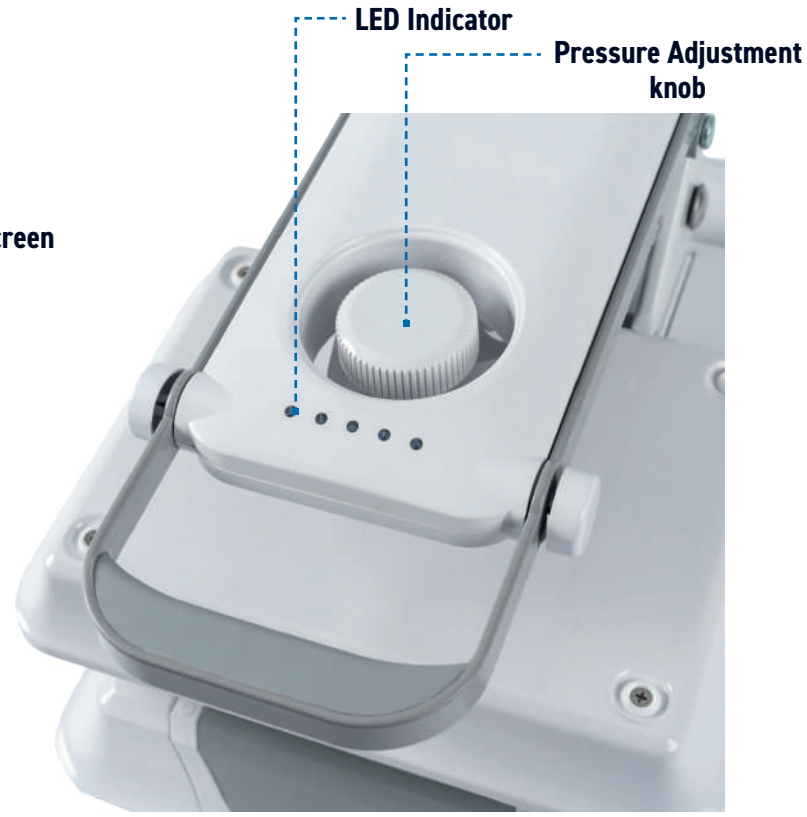

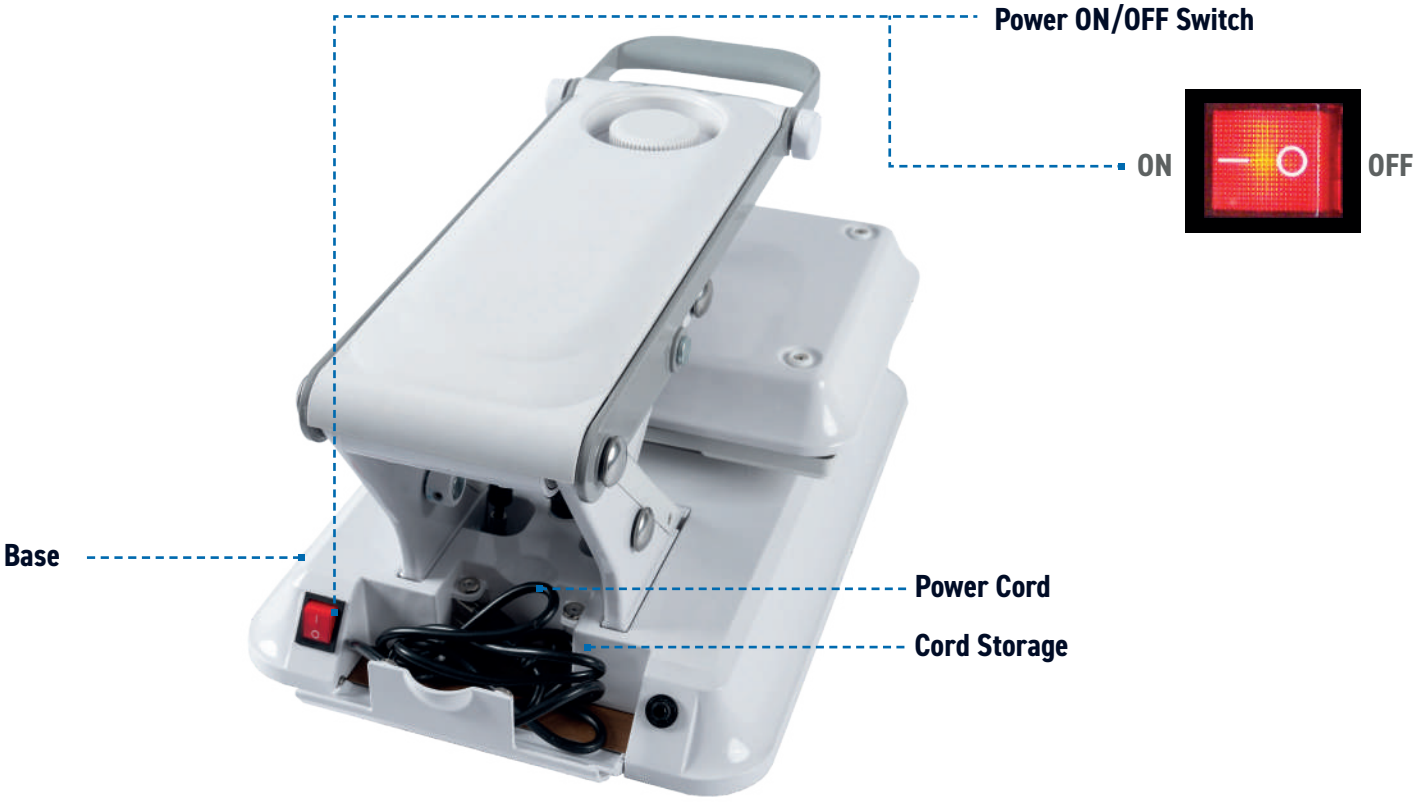

Operating Instructions

Adjusting Settings

- To avoid burns, do not touch the heated platen during use.
- Keep hands clear from the heater of the press during heater lock down as the pressure may cause injury.
- Keep the work area clean, tidy, and free of obstructions. This guide is created with the user in mind. Carefully follow the step-by-step instructions for best results:

1. Connect the power cord into a properly grounded 120-volt/240-volt (for 240-V version) electrical o minimum 10-amp rating.

- If used, a minimum 16-gauge 10-amp extension cord is required.
- Power supply cord must be disconnected before cleaning or servicing press.

2. Turn the Power Switch "ON" located on the back of the heat press. Ensure that the lever arm is not locked, and the heater is completely unclamped (open position).

3. Calibrating the heat press (ONLY if needed):

- Ensure the time/temperature controls are unlocked (refer to section Additional Controller Settings below).
- Press and hold the left and right buttons together for 3 seconds to open the calibration window displayed on the screen.
- Use the left knob to adjust the temperature to calibrate and press the left button to save calibration.
- Press and hold the right button for 3 seconds to lock the settings once calibrated.



Adjusting Settings

Recommended settings vary based on the garment material and type of transfer product used. Please consult the instructions or specifications that came with your transfer product for appropriate temperature and time settings.

Controller Settings

Press and hold the right button for 3 seconds to lock/unlock time/tem perature settings. This will help the user avoid unintended changes to the time and temperature during operations.



Press and hold the left button for 3 seconds to toggle between °F and °C.



Temperature is adjusted by rotating the left knob to the desired temperature setting. Temperature can be adjusted in 1°F/1°C increments. Counterclockwise rotation of the left knob increases the temperature.

Time controls the amount of heat transferred to the ink or adhesive. Time is adjusted by rotating the right knob to the desired time setting. Time can be adjusted in 1 sec. increments.
Clockwise rotation of the right knob increases the time.



Pressure is adjusted using the pressure adjustment knob (center spindle), no matter how thick the garment is.
Clockwise rotation of the pressure knob increases the pressure. The pressure adjustment controls pressure from low to high.

Printing with your Heat Press



Unlock the time/temperature settings by pressing and holding the right knob for 3 seconds.
Set the desired temperature and time using the left and right knob respectively.
Press and hold the right knob for 3 seconds to lock the settings.
Once the Heat Press has reached the designated temperature, pull the lower platen out to position the garment on the lower platen, centering the transfer area on the platen for best results.

Operating Instructions

Pull out the lower platen and align the transfer material on the garment to be printed and push in the lower platen all the way.
Pull out the lower platen using the slider to gain access to the garment.



Some transfer products recommend a “pre-press” to heat and flatten the garment before printing. Push the lower platen in all the way and adjust the pressure to desired pressure using the pressure adjustment knob and lower the lever arm until the heater locks into the press position. Lift open the lever arm once “pre-press” is complete.

Lower the lever arm fully until the heater locks into the press position. This will start the countdown and the LED indicator on the top cover will be lit up per the adjusted time. At the end of the heat cycle (when time has elapsed), there will be a sound indicator indicating user to lift open the lever arm.



NOTE: Depending on the transfer product, you may need to peel off the transfer carrier while it is still hot, or it may be necessary to wait until it has cooled before peeling it off.







Storage and Transportation

WARNING: Allow heat press to cool before moving or placing in storage





Wrap the power cord and place it in the cord storage provided on the back side of the heat press.

Ensure that the lever arm is in the locked position, the pressure is adjusted to bare minimum (maintain slight contact between lower platen and heater) and the lower platen is pushed all the way in, before placing the heat press in the box.





To fit the heat press back in its original packaging, lift the heat press (while in locked position) carefully holding the end of the lever arm on the back and lower platen on the front.

NOTE: Be careful to not slide out/open the lower platen or lift open the lever arm while lifting the heat press.

Storage and Transportation





Place the press in the box carefully, ensuring that the press sits on the bottom foam completely.





Slide in the two side foam pieces to hold the heater cover. Place the top foam to cover the heat press and close the box.

NOTE: When the heat press is stored or not in use, adjust the pressure to bare minimum (maintain slight contact between lower platen and heater) to keep the pressure buildup less between parts.

MERCHMAKER®
Start Making Merch Like a Pro.

Replacement Part List

ITEM #	PART NAME	PART #	QTY
1	PROJECT 1515 Base	3-1355	1
2	PROJECT 1515 Fin	3-1356	2
3	PROJECT 1515 Cord Cover	3-1357	1
4	PROJECT 1515 Lower Platen Molding	3-1358	1
5	PROJECT 1515 Lower Platen	3-1359	1
6	PROJECT 1515 Heater Arm	3-1360	1
7	PROJECT 1515 Link	3-1361	2
8	PROJECT 1515 Heater	5-1000-1	1
9	PROJECT 1515 Lever Arm	3-1362	1
10	PROJECT 1515 Fin Cover	3-1363	2
11	PROJECT 1515 Platen Cover	3-1364	1
12	Pressure Knob	1-2709	1
13	Top Cover	3-1365	1
14	Bottom Cover	3-1366	1
15	Light Guide 15X15	1-2706-1	1
16	Lens	1-2707	1
17	Control Knob	1-2743	2
18	Washer Standoff	2-1006-127	4
19	White Washer Plastic Finishing Heater Cover	1-2720	4
20	PROJECT 1515 Base Plate	3-1367	1
21	Heater Insulation Sheet	1-2744	1
22	PROJECT 1515 Heater Cover	3-1368	1
23	Rubber Foot	1-2710	4
24	Silicone Pad Black 15x15x0.25	1-2745	1
25	Rubber Foot Small	1-2711	2
26	Rubber Cap	-	1
27 a	Breaker 20A (120V US Version)	1-2746	1
27 b	Breaker 10 A (230V EU/UK & 240V US Version)	1-2728	1
28	Power Switch	1-2729	1
29	Power Board 1515 W/ Flex Cable 50"	1-2727-1	1
30	Power Cord Flying Leads (1600 mm long, 3 prongs, 0.35" dia., 10A/250V) USA	1-2747	1
	Power Cord Flying Leads (1600 mm long, 3 prongs, 0.35" dia., 10A/250V) UK	1-2748	1
	Power Cord Flying Leads (1600 mm long, 3 prongs, 0.35" dia., 10A/250V) EURO	1-2749	1
31	Display PCB	1-2726	1
32	Wire kits 1515l	1-2750	1
33	Triac 1515 16" long	1-2751	1
34	Passivated 18-8 Stainless Steel Phillips Flat Head Screw, 82 Degree Countersink, 8-32 18 Thread, 5/16" Long, Undercut	-	18
35	Phillips Flat Head Thread-Cutting Screw for Metal, Zinc-Plated Steel, 4-40 Thread, 1/4" Long	-	3
36	316 Stainless Steel Pan Head Phillips Screw, Super-Corrosion-Resistant, 8-32 Thread 13 Size, 5/16" Long	-	13
37	316 Stainless Steel Pan Head Phillips Screw	-	2
38	SHCS 0.250-20 x 0.750	-	8
39	Hub Cap 1/2"	1-2714	4

ITEM #	PART NAME	PART #	QTY
40	Rubber Spacer 0.5 OD X .23 ID X .1875	-	2
41	18-8 Stainless Steel Cup-Point Set Screw, 8-32 Thread, 1/8" Long	-	1
42	PROJECT 1515 Clevis Pin For Cord Cover	1-2752	1
43	Zinc-Plated Steel Pan Head Phillips Screw, 6-32 Thread, 3/4" Long	-	2
44	Mil. Spec. Low-Strength Steel Hex Nut 6-32 Thread Size, MS35649-262	-	2
45	PROJECT 1515 Clevis Pin	-	4
46	PROJECT 912 Clevis 1.25 inch	-	2
47	Set Screw, 1/4"-20 x 1/4"	-	7
48	Spindle /BushingSet	1-2753	1
49	316 Stainless Steel Pan Head Phillips Screw, Super-Corrosion-Resistant, 4-40 Thread 2 Size, 1/4" Long	-	2
50	Screw, Socket Head Cap 5/16"-18 x 4"	3-1011-315	1
51	Rounded Head Thread-Cutting Screws for Metal, Zinc-Plated Steel, 10-24 4 Thread, 1" Long	-	4
52	Phillips Rounded Head Thread-Forming Screws for Plastic, Zinc-Plated Steel, 4 Number 4 Size, 1/4" Long	-	4
53	Lever Dowel Pin 15x15	1-2754	1
54	Passivated 18-8 Stainless Steel Phillips Flat Head Screw, 82 Degree Countersink, 1/4"-20 Thread, 1-3/8" Long	-	1
55	Zinc-Plated Steel Pan Head Phillips Screw, 6-32 Thread, 3/8" Long	-	10
56	Neodymium Ring Magnet 1/2inch ODx1/8 inch Thick	1-2722	2
57	Neodymium Ring Magnet 3/8" OD x1/8 inch Thick	1-2723	1
58	Zlnc Plated Steel Washer M4-D12x3mm	1-2725	2
59	Heyco 1848	-	1
60	Flexible conduit 1/2" diameter, 7" long Black Color	1-2719	1
61	Metal Conduit Fitting 0.500 HG	1-2716	2
62	Flange Bushing 0.5 inch	-	10
63	PROJECT 15X15 Washer 0.25 inch	-	2
64	Ball Stud for Gas Spring, 1.19" Overall Length	1-2715	4
65	End Fitting for Gas Spring, Ball Socket	1-2718	4
66	Gas Spring, 90 lbs. Force, 5.9" Extended Length	1-2755	2
67	Thermal discs	1-2733	1
68	Firecracker Proximeter Switch 1515 LENGTH 15"	1-2756	1
69	Temperature Probe 1515	1-2721	1
70	Teflon Washer	-	2
71	Drawer Slide Set 8 inch	1-2757	1
72	Filter 10 Amp	1-2799	1
73	316 Stainless Steel Pan Head Phillips Screws, M3 x 0.50 mm Thread, 5mm Long	-	4
74	Wool insulation 1515	-	1

Parts Location Guide

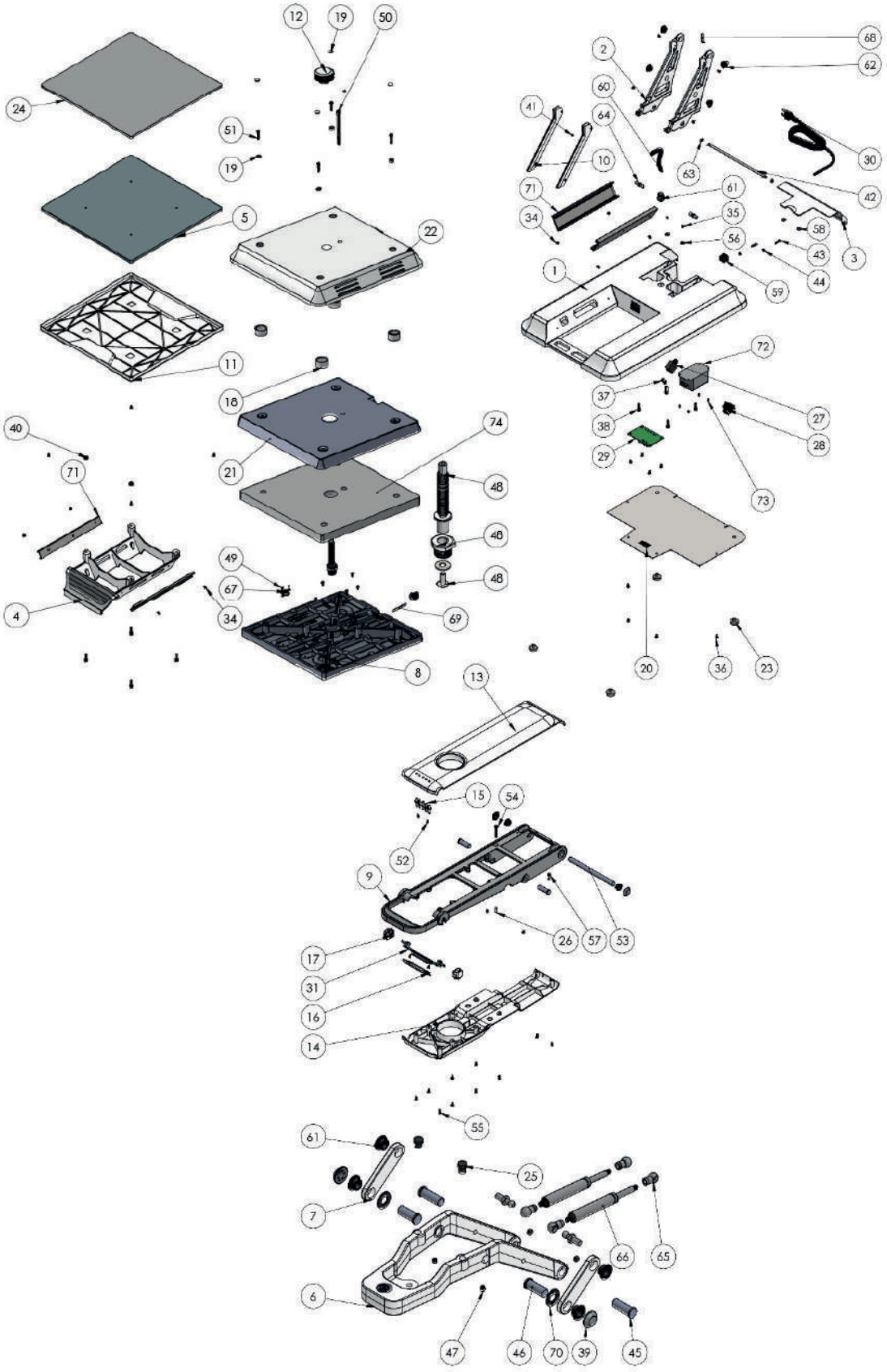

Electrical Schematics

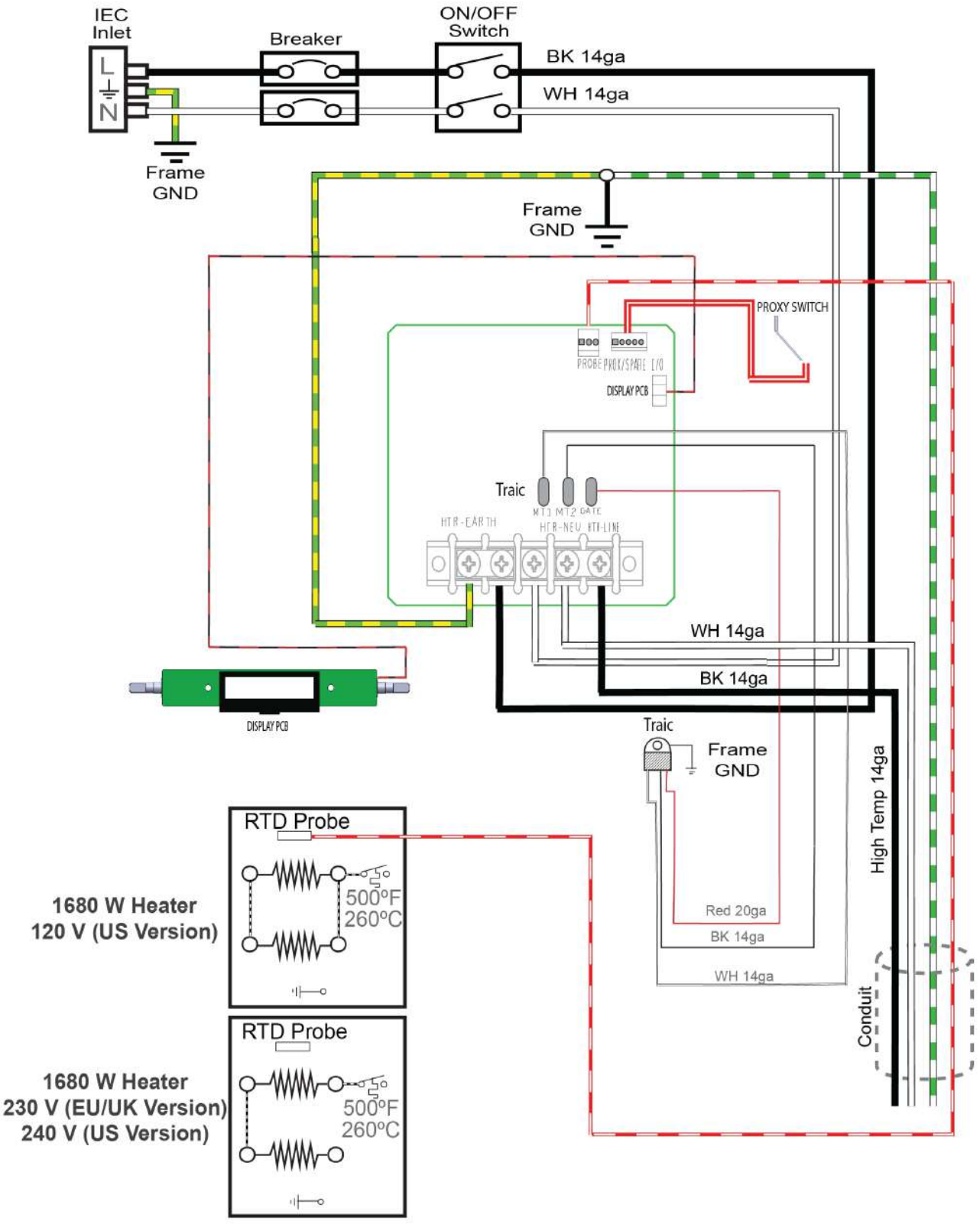

MERCHMAKER
Start Making Merch Like a Pro.

CE Certification

MACHINERY DIRECTIVE, ELECTROMAGNETIC COMPATIBILITY DIRECTIVE ATTESTATION OF CONFORMITY

Technical file of the company mentioned below has been inspected and audit has been completed successfully.
2006/42/EC Machinery Directive has been and 2014/30/EU Electromagnetic Compatibility has been taken as referances for these processes.

Company Name	: **Rongxing(Xi'an) Mechanical Technology Co., Ltd**
Company Address	: 2nd Floor(Factory), No.9 Building, China Electronics Industrial Park in Xi'an No.1288, 10th Caotan Road, Xi'an Economic and Technological Development district, Xi'an City, Shaanxi Province, China, Zip 710018
Related Directives and Annex	: **2006/42/EC Machinery Directive / Annex VIII** **2014/30/EU Electromagnetic Compatibility Directive /Annex II**
Related Standards	: **EN ISO 12100:2010, EN 60204-1:2018, EN IEC 61000-6-2:2019** **EN IEC 61000-6-4:2019, EN 60335-1:2012**
Product Name	: **Heat Press Machine**
Report No and Date	: TCF-HYY-21421
Product Brand/Model/Type	: MM912,MM15
Certificate Number	: **M.2026.206.C139695**
Initial Assessment Date	: 29.04.2026
Registration Date	: 30.04.2026
Reissue Date/No	: -
Expiry Date	: **29.04.2031**

UDEM Uluslararasi Belgelendirme
Denetim Egitim Merkezi
San. ve Tic. A.S.
Genel Müdür

The validity of the certificate can be checked through www.udem.com.tr. Upon completion of EC declaration of conformity, it is used solely at the manufacturer's responsibility. This certificate remains the property of UDEM Uluslararasi Belgelendirme Denetim Egitim Merkezi San. ve Tic. A.S. to whom it must be returned upon request. The above named firm must keep a copy of this certificate for 15 years from the registration of certificate. This certificate only covers the product(s) stated above and UDEM Uluslararasi Belgelendirme Denetim Egitim Merkezi San. ve Tic. A.S. must be noticed in case of any changes on the product(s).

Address: Mutlukent Mahallesi 2073 Sokak (Eski 93 Sokak) No:10 Çankaya Ankara - TÜRKIYE
Phone: +90 0312 443 03 90
E-mail: info@udem.com.tr www.udem.com.tr



CONTACT US

Warranty Support & Customer Service

info@stahls.de

Web
stahlseurope.com

MerchMaker
Start Making Merch Like a Pro.

STAHLS'

This document includes multiple trademarks and describes equipment covered by many patents that are owned by GroupeSTAHL and/or its subsidiaries. GroupeSTAHL enforces its rights to protect these intellectual properties. ©2022

REV. 0624